PMOR3021 Microwave

Exploded View	Door/Control Panel	Packing
Oven Parts	Complete Parts List	

OVEN PARTS

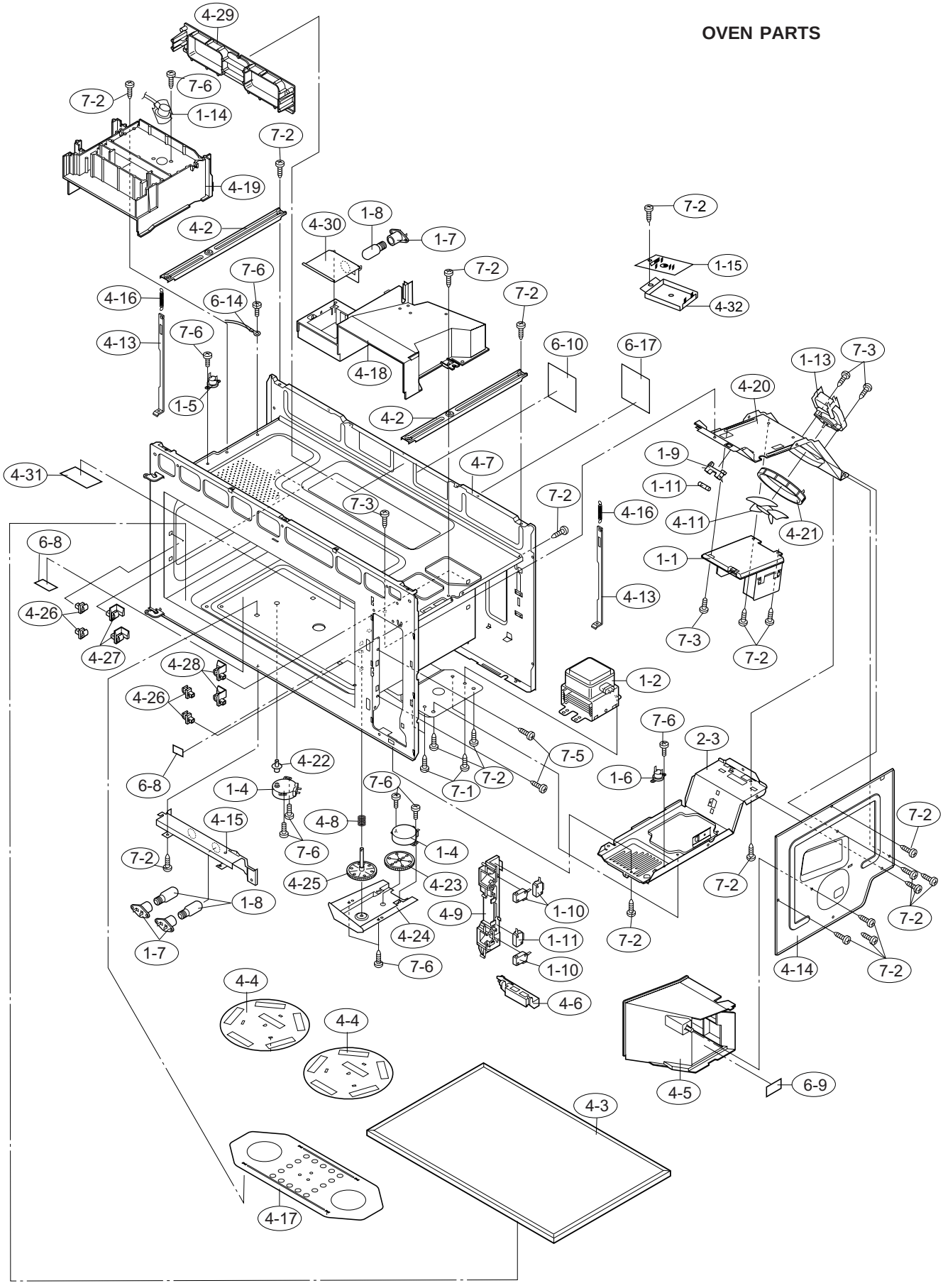
4-29
7-6
7-2
1-14
7-2
4-19
4-2
4-30
1-8
1-7
7-2
1-15
4-32
7-6
7-2
7-2
4-16
6-14
4-13
7-6
1-5
4-18
6-10
6-17
1-13
7-3
4-20
4-2
4-31
4-7
1-9
1-11
7-3
7-2
4-16
4-11
4-21
6-8
1-1
4-13
4-26
4-27
7-3
7-2
4-28
1-2
4-26
7-6
2-3
7-5
4-22
6-8
1-4
7-6
7-1
7-2
1-6
7-2
4-15
4-8
7-6
1-4
7-2
4-25
4-23
7-2
1-8
4-9
1-10
7-2
1-7
4-24
1-11
7-6
1-10
4-14
7-2
4-4
4-6
4-4
4-5
6-9
4-3
4-17

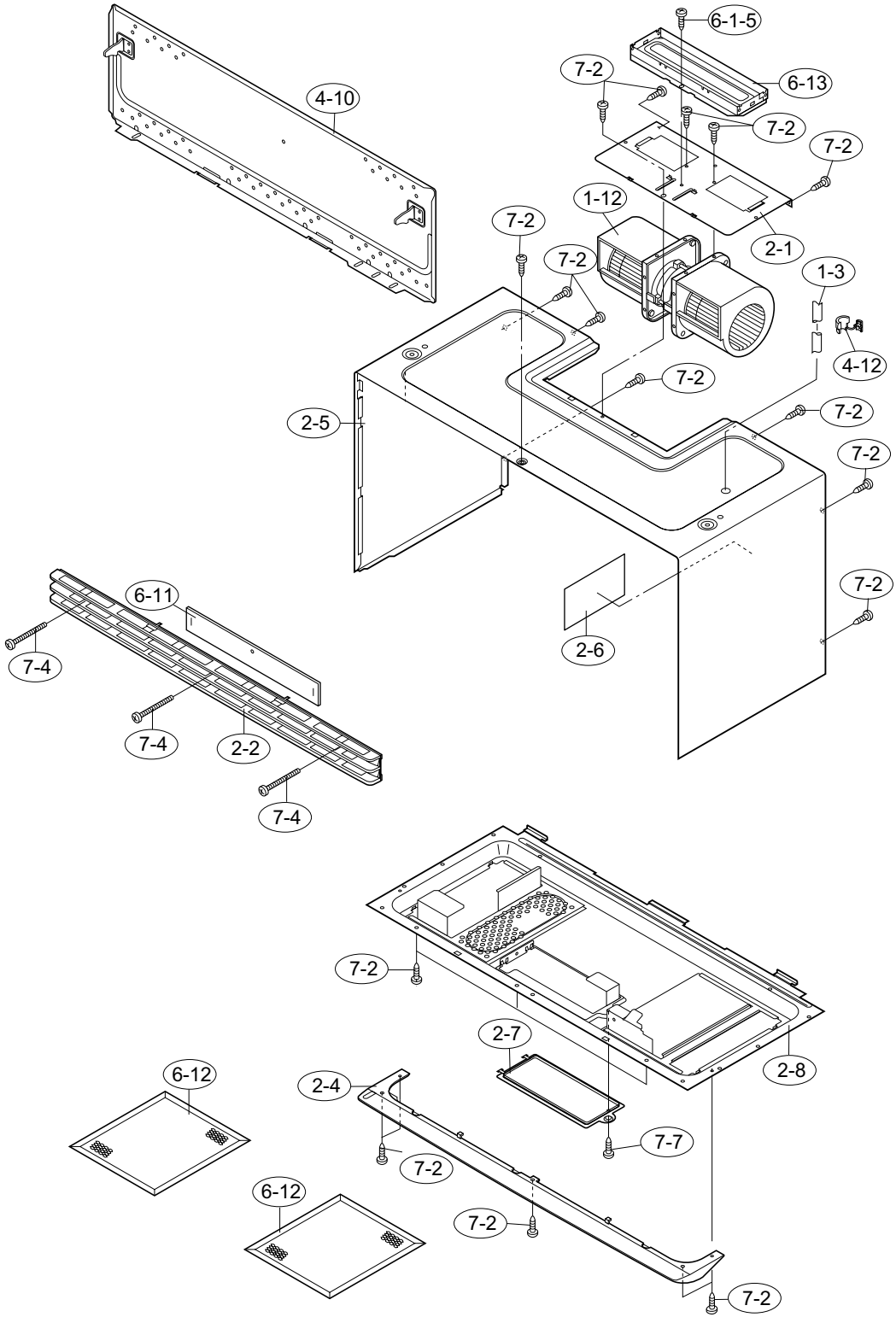
6-1-5
7-2
6-13
4-10
7-2
7-2
1-12
7-2
2-1
7-2
1-3
4-12
7-2
2-5
7-2
7-2
7-2
6-11
2-6
7-4
7-4
2-2
7-4
7-2
2-7
2-8
6-12
2-4
7-7
7-2
6-12
7-2
7-2

DOOR PARTS

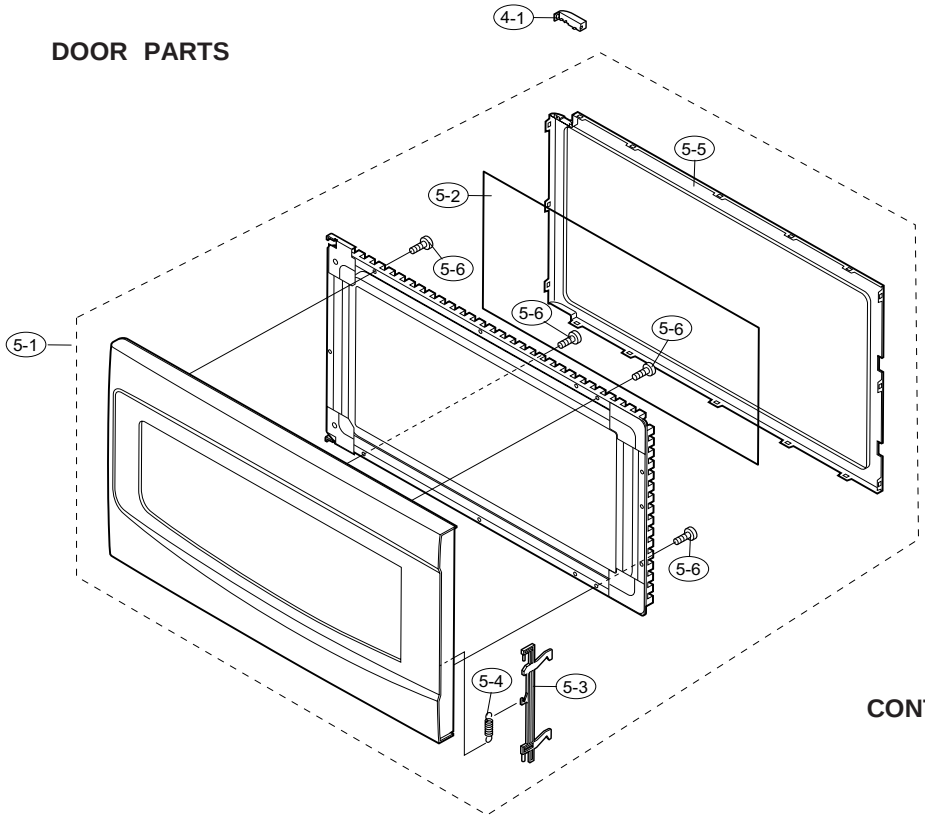

CONTROL PANEL PARTS

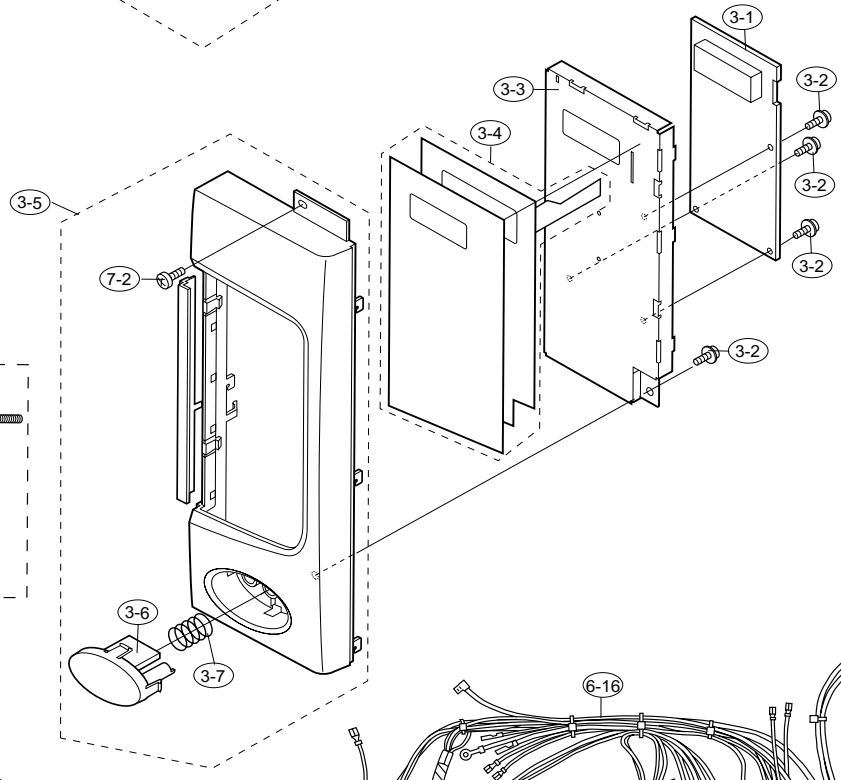

MISCELLANEOUS

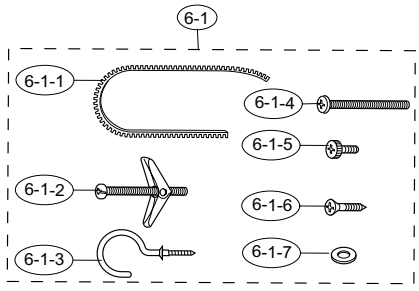

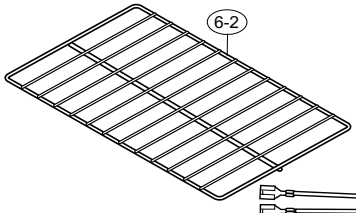

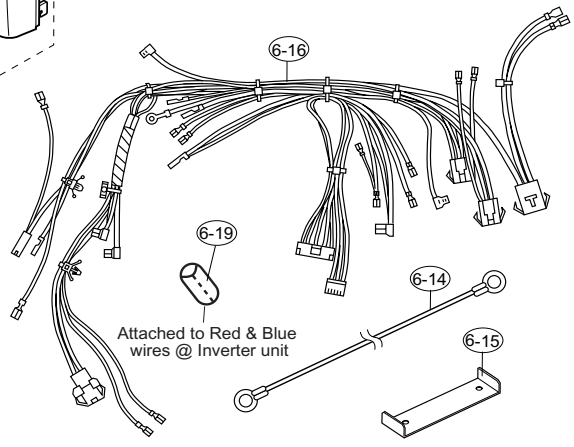

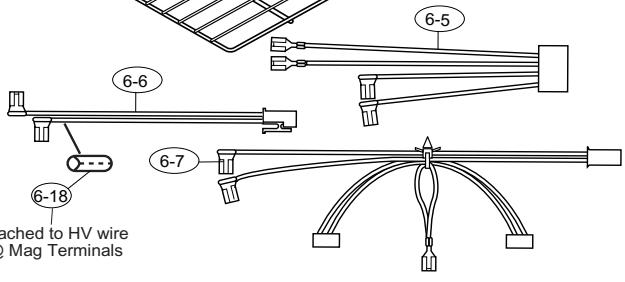

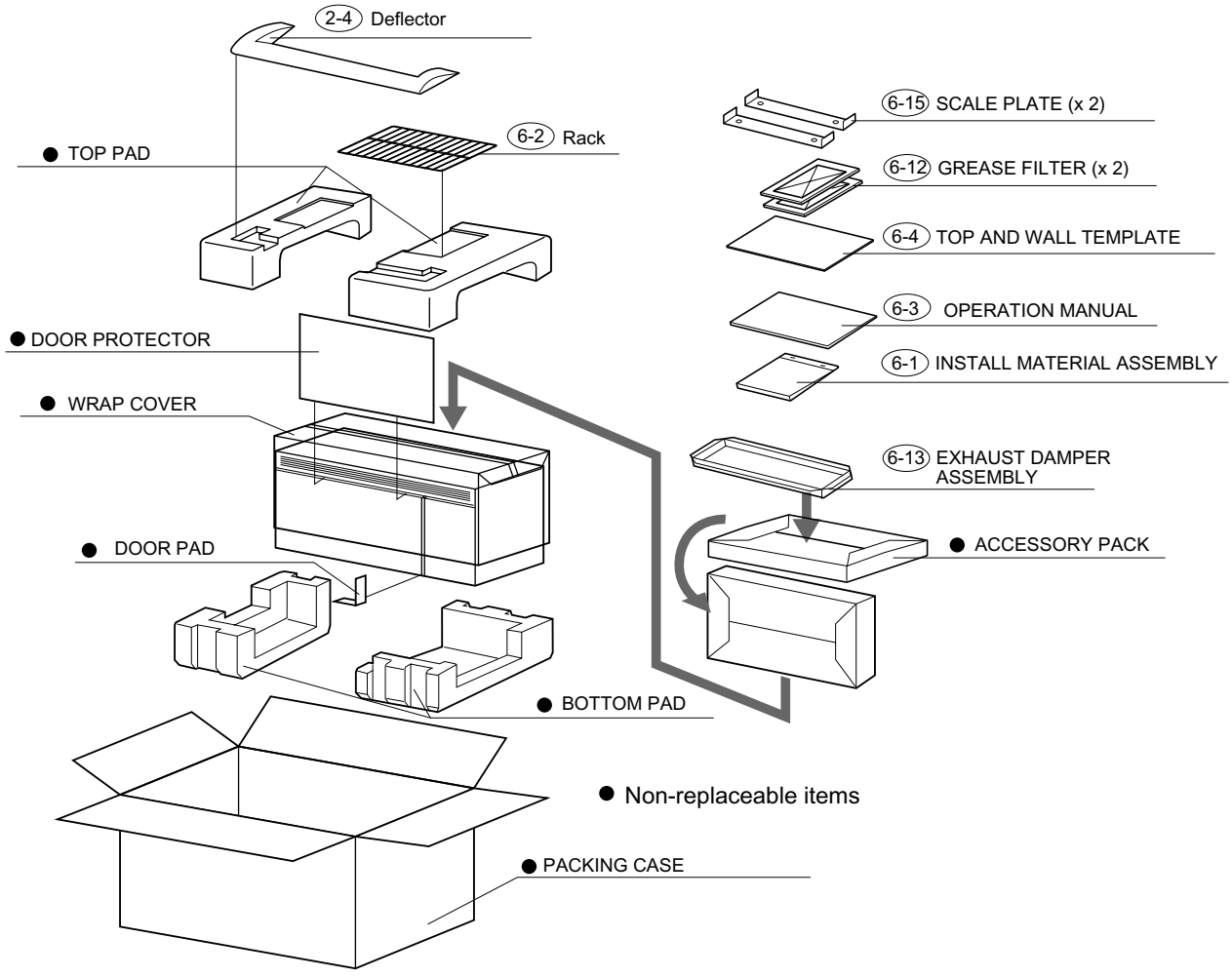
2-4 Deflector
6-2 Rack
● TOP PAD
● DOOR PROTECTOR
● WRAP COVER
● DOOR PAD
● BOTTOM PAD
● PACKING CASE
6-15 SCALE PLATE (x 2)
6-12 GREASE FILTER (x 2)
6-4 TOP AND WALL TEMPLATE
6-3 OPERATION MANUAL
6-1 INSTALL MATERIAL ASSEMBLY
6-13 EXHAUST DAMPER ASSEMBLY
● ACCESSORY PACK
● Non-replaceable items

PMOR3021 Parts List

REF. NO.		DESCRIPTION
		ELECTRIC PARTS
1- 1	76227	Inverter unit
1- 2	76228	Magnetron
1- 3	66171	Power supply cord
1- 4	76229	Stirrer motor
1- 5	76230	Thermal cut-out (Oven) Open at 145°C
1- 6	76231	Thermal cut-out (Hood fan) N.O. Close at 60C Open at 45°C
1- 7	76232	Lamp socket
1- 8	76233	Oven lamp and hood lamps
1- 9	86796	Fuse holder
1-10	66236	Primary interlock/ Secondary interlock/ stop switches
1-11	66179	Monitor switch (V-16G-2C25) with fuse (20A) assembly
1-12	76234	Hood fan motor
1-13	76235	Fan motor
1-14	76236	Humidity sensor
1-15	76242	Noise Filter
		CABINET PARTS
2- 1	76146	Rear stay
2- 2	76147	Hood louver [PMOR3021S] [PMOR3021B]
2- 2	76148	Hood louver [PMOR3021R]
2- 3	76149	Base plate R
2- 4	66607B	Bottom sash [PMOR3021S] [PMOR3021B]
2- 4	66607R	Bottom sash [PMOR3021R]
2- 5	76152	Outer case cabinet [PMOR3021S] [PMOR3021B]
2- 5	76153	Outer case cabinet [PMOR3021R]
2- 6	76154	Schematic diagram
2- 7	76155	Hood lamp glass assembly [PMOR3021S] [PMOR3021B]
2- 7	76156	Hood lamp glass assembly [PMOR3021R]
2- 8	76157	Base cover [PMOR3021S] [PMOR3021B]
2- 8	76158	Base cover [PMOR3021R]
		CONTROL PANEL PARTS
3- 1	76159	Control unit
3- 2	76160	Screw; 3mm x 8mm
3- 3	76161	Key fixing angle
3- 4	76162	Key sheet assy [PMOR3021S] [PMOR3021B]
3- 4	76163	Key sheet assy [PMOR3021R]
3- 5	76164	Control panel frame assy [PMOR3021S]
3- 5	76165	Control panel frame assy [PMOR3021B]
3- 5	76166	Control panel frame assy [PMOR3021R]
3- 6	76167	Open button [PMOR3021S]
3- 6	76168	Open button [PMOR3021B]
3- 6	76169	Open button [PMOR3021R]
3- 7	76170	Button spring

PMOR3021 Parts List

REF. NO.		DESCRIPTION
		OVEN PARTS
4- 1	76171	Door stopper
4- 2	76172	Chassis support
4- 3	76173	Table tray assembly
4- 4	76174	Stirrer fan assembly
4- 5	76175	Magnetron duct
4- 6	86824	Open lever
4- 7		Oven cavity (Not replaceable part)
4- 8	76177	Shield spring
4- 9	66871	Latch hook
4-10	76179	Unit mounting plate assembly
4-11	76180	Fan blade
4-12	66196	Cord bushing
4-13	76473	Mounting lever
4-14	76182	Hood intake duct R
4-15	76183	Hood lamp mount
4-16	86786	Latch spring
4-17	76474	Distribution plate assembly
4-18	76185	Hood duct R
4-19	76186	Hood duct L
4-20	76187	Fan duct
4-21	76188	Orifice
4-22	76189	Left stirrer shaft
4-23	76190	Stirrer motor gear
4-24	76191	Motor mounting angle
4-25	76192	Stirrer shaft assembly
4-26	76193	Rack holder
4-27	76194	Left rear rack holder
4-28	76195	Right rear rack holder
4-29	76196	Center duct
4-30	76197	Oven lamp angle
4-31	66227	Lamp filter
4-32	100894	Unit Angle
		DOOR PARTS
5- 1	76475	Door assembly [PMOR3021S]
5- 1	76199	Door assembly [PMOR3021B]
5- 1	76200	Door assembly [PMOR3021R]
5- 2	76201	Sealer film
5- 3	86785	Latch head
5- 4	86786	Latch spring
5- 5	76476	Choke cover
5- 6	66261	Screw : 4mm x 8mm

PMOR3021 Parts List

REF. NO.		DESCRIPTION
		MISCELLANEOUS
6- 4	76477	Top and Wall template
6- 5	76205	Oven lamp harness
6- 7	76206	Stop/ PWM wire harness
6-1	76207	Installation material assembly
6-10	76208	DHHS/GRD/CAUTION label
6-11	76209	Charcoal filter
6-1-1	66197	Grommet
6-12	76211	Grease filter
6-1-2	66204	Toggle screw
6-13	66180	Exhaust damper assembly
6-1-3	66209	Cord holder
6-14	76214	Sensor ground wire
6-1-4	66257	Screw : 5mm x 60mm
6-15	76215	Scale plate
6-1-5	86905	Screw : 4mm x 12mm
6-16	76216	Main wire harness
6-1-6	66267	Screw : 5mm x 35mm
6-1-7	66268	Washer
6-2	76217	Rack
6-3	76218	Operation manual
6-6	76219	High voltage wire assembly
6-8	76220	DHHS service caution label
6-9	76221	Monitor caution label
6-17	76239	NWH Caution
6-18	76240	Harness Ferrite
6-19	76241	Harness Ferrite
		SCREWS,NUTS AND WASHERS
7- 5	86820	Special screw
7-1	76223	Screw : 5mm x 8mm
7-2	86905	Screw : 4mm x 12mm
7-3	86901	Screw : 4mm x 8mm
7-4	76225	Special screw [PMOR3021R]
7-4	76226	Special screw [PMOR3021S] [PMOR3021B]
7-6	86847	Screw : 3mm x 8mm
7-7	66847	Screw : 4mm